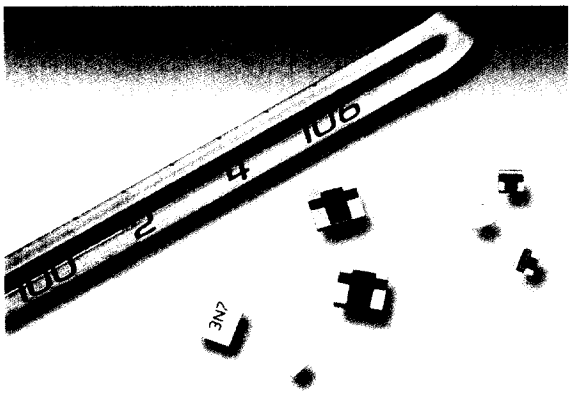

EMC Technology's MTVA Thermopads are microwave absorbtive attenuators which offer a smaller physical size with increased frequency range. The series operates DC to 18 GHz. The MTVA version of the Thermopad also offers wire bondable terminals for use with alternative high frequency attachment methods and space applications.

General Specifications

Nominal Impedance ..... *50 Ohms Nominal*
Frequency Range ..... *DC to 18 GHz*
Attenuation Accuracy ..... *± 0.5 dB*
TCA Tolerance ..... *± 0.001 dB/dB/°C*
VSWR (Typical) ..... *1.30 @ 1 GHz*
Power Rating ..... *200 mWatts*
Power Derating ..... *100% @ 125° C*
Derates to 0% @ 150° C
Operating Temperature ..... *-55° C to +150° C*

Material Specifications

Substrate ..... *Alumina*
Resistive Material ..... *Thick Film*
Termination Material .. *Thick Film, Nickel Barrier with Solder Plated Finish*
Gold and Wire Bondable Options Available

Usable Frequency Range Reference Table

CTVA ..... *DC to 2 GHz*
TVA, W1, W3 ..... *DC to 6 GHz*
MTVA, G (N3, N4, N5) ..... *DC to 18 GHz*
MTVA, G (N6, N7) ..... *DC to 12.4 GHz*
MTVA, W3, WB1, W1 ..... *DC to 12.4 GHz*
HTVA ..... *DC to 20 GHz*
KTVA ..... *18 to 46 GHz*
Coaxial TVA ..... *DC to 6 GHz*

Ordering Information

MTVA 03 00 N 05 W3 S

SERIES
MTVA

NOMINAL ATTENUATION
01 = 1 dB
02 = 2 dB
03 = 3 dB
04 = 4 dB
05 = 5 dB
06 = 6 dB
08 = 8 dB

EMC CODE

TCA SLOPE
N = Negative

TCA (dB/dB/°C)
03 = .003
04 = .004
05 = .005
06 = .006
07 = .007
09 = .009

METALLIZATION
(blank) = Planar
W3 = Triple Wrap
W1 = Single Wrap
WB1 = Single Wrap
G = Gold Metallization

PRETINNING
(blank) = Standard
S = Pretinning
F = Lead Free
Not available on WB1 or G
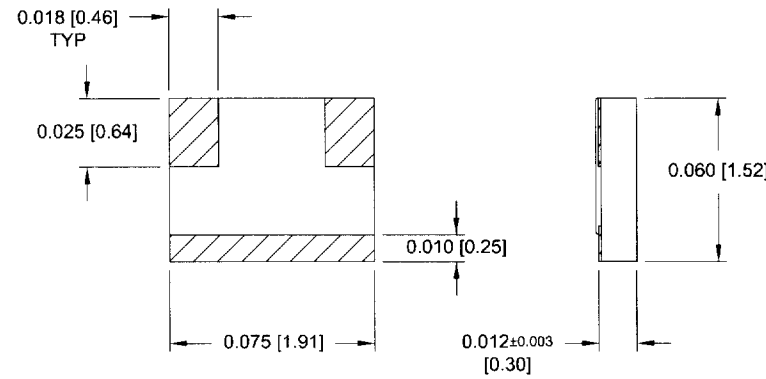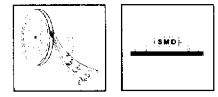
Product Dimensions